斜槽
TAPER-SLOT® SCREEN PATENT NOTE:
US PAT. 5,746,322
CDN PAT. 2,206,981
DE PAT. 69714152
UK PAT. 0815956

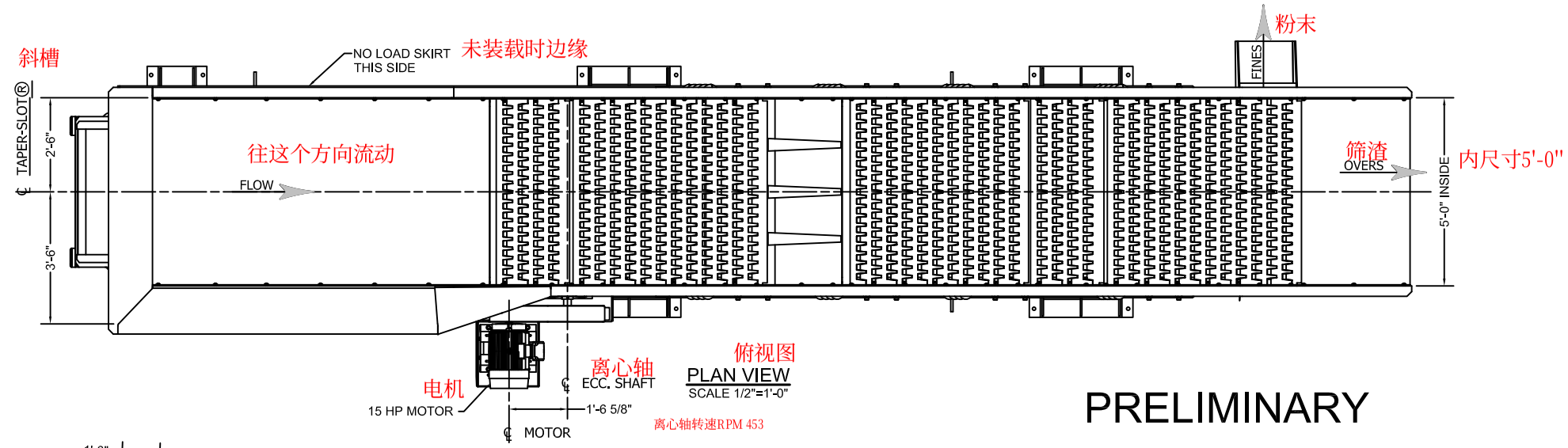

PRELIMINARY

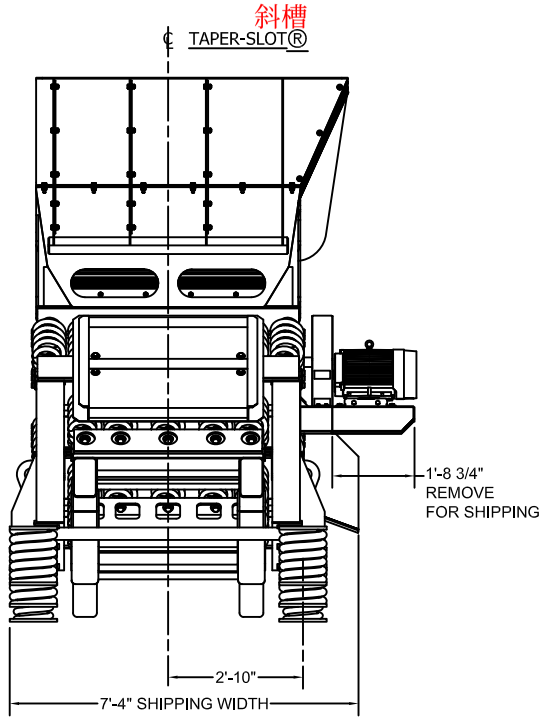

INFEED END VIEW
SCALE 1/2"=1'-0"
进料端视图

（2）#55隔离弹簧（黄色）
12" O.D.*8" I.D*14 1/2" 净长度
每根弹簧静负载=6430#
垂直动负载=+/-700#
水平动负载=+/-700#

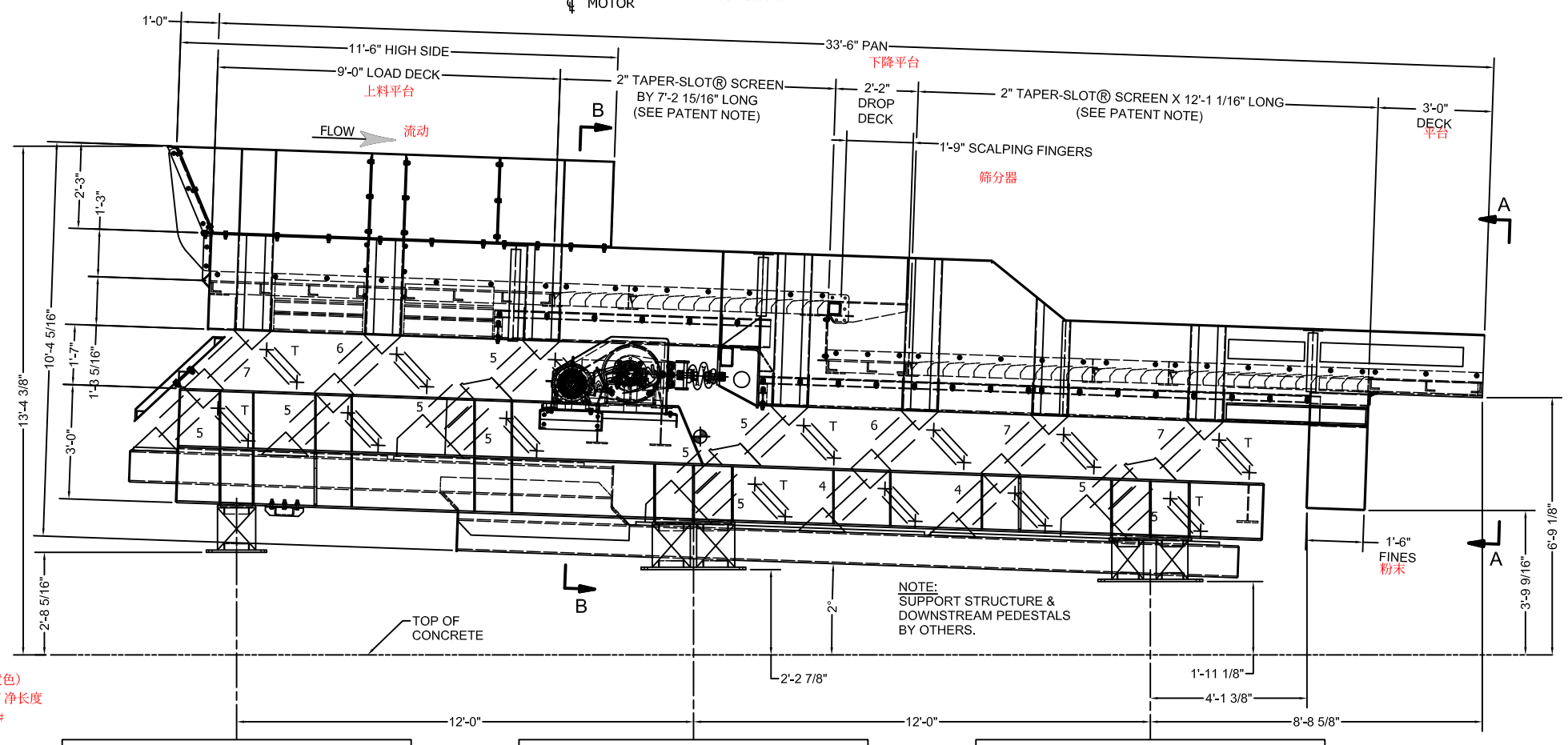

(2) #55 ISOLATION SPRINGS (YELLOW)
12" O.D. x 8" I.D. x 14 1/2" FREE LENGTH
STATIC LOAD PER SPRING = 6430#
VERTICAL DYNAMIC LOAD PER SPRING = ±700#
HORIZONTAL DYNAMIC LOAD PER SPRING = ±700#

(4) #55 ISOLATION SPRINGS (YELLOW)
12" O.D. x 8" I.D. x 14 1/2" FREE LENGTH
STATIC LOAD PER SPRING = 5680# 静负载
垂直动负载 VERTICAL DYNAMIC LOAD PER SPRING = ±700#
水平动负载 HORIZONTAL DYNAMIC LOAD PER SPRING = ±700#

(4) #33 ISOLATION SPRINGS (BROWN) 隔离弹簧
10" O.D. x 7" I.D. x 13 1/4" FREE LENGTH
STATIC LOAD PER SPRING = 3360# 静负载
VERTICAL DYNAMIC LOAD PER SPRING = ±700# 垂直动负载
HORIZONTAL DYNAMIC LOAD PER SPRING = ±700# 水平动负载

ELEVATION VIEW 正面图（比例 1/2"=1'-0"）
SCALE 1/2"=1'-0"

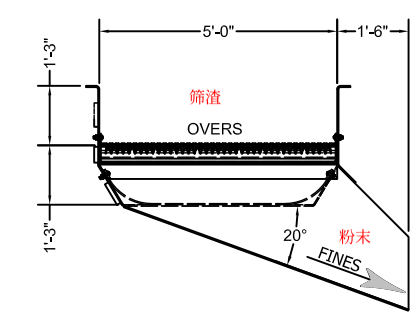

DISCHARGE END VIEW A-A
SCALE 1/2"=1'-0"
卸货端视图

FROM 2421-01

STATIC LOAD TOTAL	DYNAMIC LOADING (PER ISOLATION SPRING)	MODEL / SIZE	OPERATING SPECIFICATIONS		NOTES
50,000 LBS WITHOUT MATERIAL	700 LBS, 700 LBS, 700 LBS, 700 LBS	ONE (1) XXHDBS2 60" WIDE X 15/15" DEEP X 33'-6" LONG TAPER-SLOT® SCREEN	PAN STROKE 29mm	BALANCER STROKE 27mm	
ACTION SUPPLIED EQUIPMENT ONLY	ACTION EQUIPMENT COMPANY, INC. ASSUMES NO RESPONSIBILITY FOR THE DESIGN OF CONVEYOR FOUNDATIONS AND / OR SUPPORTING STEEL.	MATERIAL DESCRIPTION: CONSTRUCTION & DEMOLITION WASTE	ECCENTRIC SHAFT RPM = 453		PAINT: CBI YELLOW w/Safety Yellow Drive Guard
			THIRD ANGLE PROJECTION	DRAWING TOLERANCES: UNLESS OTHERWISE SPECIFIED; DECIMAL .X ± .06" .XX ± .010" .XXX ± .005"; FRACTION X/X ± 1/16"; ANGLE X° ± 1/2"; DIMENSIONS: INCHES UNLESS OTHERWISE SPECIFIED	SHIPPING BRACES MUST BE REMOVED BEFORE STARTING CONVEYOR. CUSTOMER TO SUPPLY STRUCTURAL SUPPORTS FOR MACHINE IF NOT PROVIDED BY ACTION.

TITLE

SHEET 1 OF 2